Home Page

EXTERNAL MAGNETIC FIELD PROPULSION SYSTEM (ExMF-PS)

By: Mahmoud E. Yousif
yousif@exmfpropulsions.com/
C/O Physics Department - The University of Nairobi
P.O.Box 30197
Nairobi-Kenya

ABSTRACT

Several mechanisms were developed from the Magnetic Interaction hypothesis (***MIH***) and the related Universal Energies (***UE***) of captured charged particles produced by External Magnetic Field (***ExMF***), using rotating low magnetic fields (***RLMF***) operated from a solenoid. It is the ***ExMF*** that leads to energization of these particles. Electromotive force ***(e.m.f)*** can be generated across a conductor terminal nearby or directly influenced by several turns of a rotating ***ExMF***.

If a ***RLMF*** is produced to penetrate bismuth in a mechanism (as suggested), then the produced ***ExMF*** interacts with the bismuth, resulting in continuous, enormous and momentary force, or ***ExMF*** force, to propel the mechanism. These mechanisms are extended to apply to the propulsion of several systems among them two flying objects (***FO***).

1: INTRODUCTION

Continued efforts have been made to harness nature for human requirements, particularly in the energy sector. At present the required energy is that which could be manipulated using particles from the Sun or other Stars as classified by Nikolai Kardashev [1].

The new approach in fundamental physics as introduced by The Magnetic Interaction Hypothesis (***MIH***) [2] and The Spinning Magnetic Force (***SMF***) [3] that leads to a process for producing external magnetic field (***ExMF***) which is shown in my *Universal Energies* (***UE***) document [4] is further enhanced by the introduction of the Elements of Magnetic Lines of Force (***EMLF***) [5]. As a result this added refinement has led to an entirely new hypothesis regarding energy transformation and possibly a propulsion system that may propel flying objects (***FO***).

The production of ***ExMF*** outside an atom has already been suggested [6] as well as its implementation in the propulsion of ***FO*** [7]. In this respect it is the aim of this paper to propose on a theoretical basis a propelling method for flying objects which utilizes the production of ***ExMF***. Therefore, in this paper is presented a general study of flying objects which have attached mechanisms that utilize ***ExMF*** - such as small electric generators capable of providing the necessary electric currents to these ***FO***s and general usage, as well as new methods for propelling ground systems (vehicles).

This work suggests in Chapter 2:0 a method for capturing and energization of charged particles as well as the production of the necessary ***ExMF*** [4]. This work also proposes for the

sustainability of that energy production a number of purposely designed machines. In chapter 3:0 both the process of obtaining charged particles (of electrons and protons) and the processes of obtaining the required rotating low magnetic fields (***RLMF***) are elaborated.
In Chapter 4:0 is given an example for generating electricity using ***ExMF***, while Chapter 5:0 shows the principle translational force to be obtained from the interaction of external magnetic fields with diamagnetic materials. Chapter 6:0 investigates the operational background of an ***ExMF***-propulsion system (***ExMF-PS***) and its associated provision of charged particles. Differences are explained between the translation force and propulsion force for the flying objects, and the concept of ***ExMF*** propulsion force, which is a continuous, enormous and momentary force, is presented. Chapter 7:0 then explains the mechanisms and forces involved in flying objects; forces such as ***ExMF*** levitation force (F_{ExL}) or ascending force (F_{ExA}), ***ExMF*** driving force (F_{ExD}), ***ExMF*** stability force (F_{ExS}), ***ExMF*** brake force (F_{ExB}) and the ***ExMF*** resulted force (F_{ExR}). Hypothetical examples of ***ExMF*** driving force resulted from an interaction between ***ExMF*** with bismuth is also given. Chapter 8:0 gives an example for production of ***ExMF*** and energization of electrons. Finally chapter 9:0 presents the hypothetical operational characteristics of the External Magnetic Field Propulsion System (***ExMF-PS***).

Since the ***ExMF-PS*** mechanism is based on a somewhat 'different' and unique concept of energy transformation, with a technique that primarily utilizes ambient or interstellar charged particles (electrons, protons and positrons) to produce its ***ExMF***, as long as this propelling force is continuous and linked with propellant (of said ambient or interstellar charged particles), then propulsion will persist continually, and require it to carry no fuel-load of *propellant* mass. That means that the ***ExMF-PS*** craft could attain any required maximum transit speed physically and momentarily, simply by ionizing the required electrons from the ambient air, solar wind, interstellar fields (or from the controlled injection of electrons that can also be provided from within the craft by the same mechanism in back-up situations), making such craft suitable for both earthly transportations and space travel [8]. Indeed, suggestions will then be included as to how the ***ExMF-PS*** mechanism can in turn overcome all perceived difficulties presented by Marc G. Millis of NASA [9], for space propellants which so far approximate concepts such as the utilization of magnetic fields to provide solar wind sails in order to propel spacecraft [10].
It is then suggested how the ***ExMF-PS*** can form a theoretical base for the Searl Effect Generator (***SEG***) [11] and the Magnetic-Gravity Effects [12] as an inverse-gravity device, further modified by the Roschin Godin Searl Generator ***(M-RG-Searl-G)*** [13] which also provides a practical method for generating abundant amounts of electricity.

2: ExMF PRODUCTION AND ENERGIZATION OF CHARGED PARTICLES

2:1 ExMF PRODUCTION

Fig.1, shows the capturing and energization machines. By operating the electric motors 2 and 12 the solenoid 13 rotates while producing a rotating low magnetic field (***RLMF***) 14, electromagnetic radiation 15 ionizes electrons that interact with the ***RLMF*** to produce an intense external magnetic field (***ExMF***) 16, as expressed in my *The Universal Energies* document [4]

$$B_{EI} = 10^8 \; B_1 \; \gamma_{PS} \left(B_{1\to n} + \frac{n_m \; l \; q^3 \; B_{1\to n}{}^2}{m^2 \; v_c \; c} \right) \quad T \qquad \{1\}$$

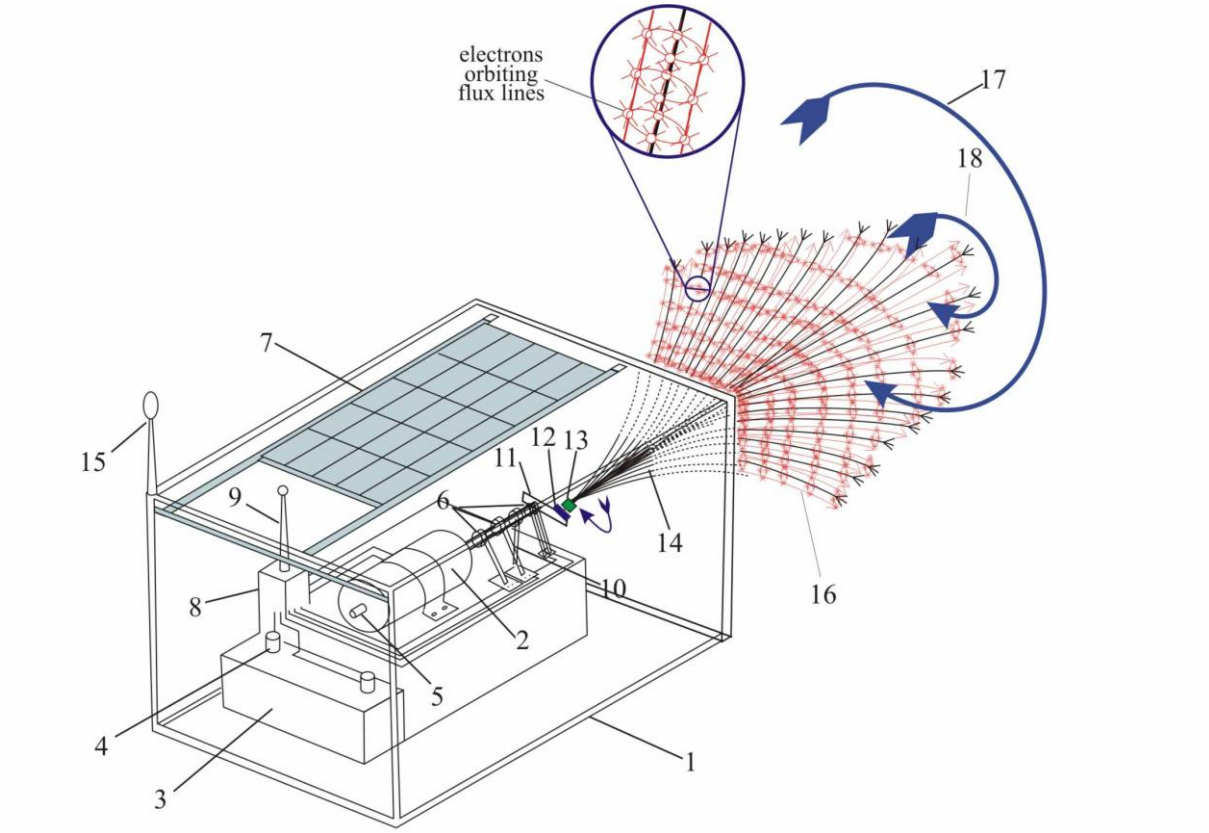

Fig.1. Mechanism to capture and energized electrons. Rotating low magnetic field (***RLMF***) 14 produced by solenoid 13 rotates by two electric motors 2 and 12, captured electrons ionized by 15, thus producing external magnetic field (***ExMF***) 16, opposite in direction to **RLMF**, and leading to energization of electrons while radiating cyclotron radiation.

Where, $B1 \rightarrow n$ is the previous magnetic field (starting with original field B_1) in Tesla, c is speed of light in m.s^{-1}, l is the effective length of the magnetic lines of force (along which charged particles gyrates) in meters, q is the elementary charge in Coulomb, n_m is the number of charged particles along one meter length, m is the mass of charged particles in kg, v_c is velocity of captured charged particle in m.s^{-1}, γ_{ps} is the relative magnitudes of the primary and secondary ***ExMF*** in the final production of ***ExMF*** [4], with the value10^8 being the number of lines of force in m^2 (equivalent to one Tesla) that could produce one volt [5] and the produced $\boldsymbol{B_{EI}}$ is in Tesla.

With respect to Fig.1 in the 'Elements of Magnetic Lines of Force' [5], the distance D between any two magnetic lines of force will determine the charged particle's penetration capability towards the deeper lines. The cross-section of lines of forces in any circumference is given by

$$N_C = 4N_S = 4\sqrt{B \times 10^8} = 4\sqrt{\frac{1}{D^2 \times 10^8} \times 10^8} = 4\sqrt{\frac{10^8}{D^2 \times 10^8} = 4\sqrt{\frac{1}{D^2}}} = \frac{4}{D} \qquad \{2\}$$

Where, N_S is the number of lines of force along any cross-sectional side of the bundle, D is the distance between two lines of force [5], and N_C is the number of lines in circumferential layers.

From Eq.{2}, the capability of the ***RLMF*** in capturing charged particles is divided into three regional groups: the outer most of which are of fewer lines but capture most charged particles, followed by the central lines, while the most inner are the greatest number of lines each capturing the least amount of particles.

In a region of rotating magnetic lines of force with field intensity of one Tesla, the relative percentage of magnetic lines of force in the 1st group (N_{c1}) is:

$$\sum_{k=1}^{100} A_k = \frac{n}{2}(A+A) = \frac{4n}{2}\left[2N_S - 99\right] = N_{C1} = 3{,}990{,}200\ lines = 3.9802\ \%\ of\ N_A \qquad \{3\}$$

The relative percentage for the 2nd group (N_{c1}) is

$$\sum_{k=1}^{500} A_k = \frac{n}{2}(A+A) = \frac{4n}{2}\left[2N_S - 400\right] = N_{C2} = 19{,}600{,}000\ lines = 19.6\%\ of\ N_A \qquad \{4\}$$

The relative percentage for the 3rd group (N_{c3}) is

$$\sum_{k=1}^{2073} A_k = \frac{n}{2}(A+A) = \frac{4n}{2}\left[2N_S - 1573\right] = N_{C3} = 76{,}398{,}342\ lines = 76.398342\%\ of\ N_A \qquad \{5\}$$

The amount of charged particles (n_m) captured along one meter of line of force by the 1st 2nd and 3rd groups are thought to be n_{m1} = 80%, n_{m2} = 15% and n_{m3} = 5% of the total captured amount; therefore, produced ***ExMF*** shown in Graph.1, is given by:

$$B_{EI} = (N_{C1}\,\gamma_{PS}\,(B_{1\to n} + \frac{(80\%\,n_m)\,l\,q^3\,B_{1\to n}{}^2}{m^2\,v_c\,c})) + (N_{C2}\,\gamma_{PS}\,(B_{1\to n} + \frac{(15\%\,n_m)\,l\,q^3\,B_{1\to n}{}^2}{m^2\,v_c\,c}))$$

$$+ (N_{C3}\,\gamma_{PS}\,(B_{1\to n} + \frac{(5\%\,n_m)\,l\,q^3\,B_{1\to n}{}^2}{m^2\,v_c\,c})) \quad T \qquad \{6\}$$

Gyrating charged particles shown in Fig.1, while building intense ***ExMF*** 16 and given by Eq.{6} will have very small radius producing high excitation [4], leading to an emission of synchrotron radiation, the wavelength of which depends on gyrating radius [14].

2:2 MACRO-ENERGIZATIONS OF CHARGED PARTICLES

The building up of ***ExMF*** given by Eq.{6}, the macro-level of kinetic energy ***K*** of charged particles derived from micro-level [4], it is given by:

$$K = B_{EI}\ B_2\ r_m{}^2\ c\ d_K\ \sin\theta = q\,v_c\ B_{EI}\ d_K\ \sin\theta \qquad Joules \qquad \{7\}$$

Where, $\boldsymbol{B_{EI}}$ is the rotating magnetic field in Tesla, B_2 is the circular magnetic field of charged particle (***CMF***) in Tesla, $\boldsymbol{r_m}$ is the magnetic radius of ***CMF*** in meter, θ is the angle between the two fields $\boldsymbol{B_{EI}}$ and B_2 (***CMF***) at interaction moment, $\boldsymbol{d_K}$ ($\boldsymbol{d_X} = \boldsymbol{d_Y} + \boldsymbol{d_Z}$) is three dimension distance traveled by the magnetic line of force in meters.

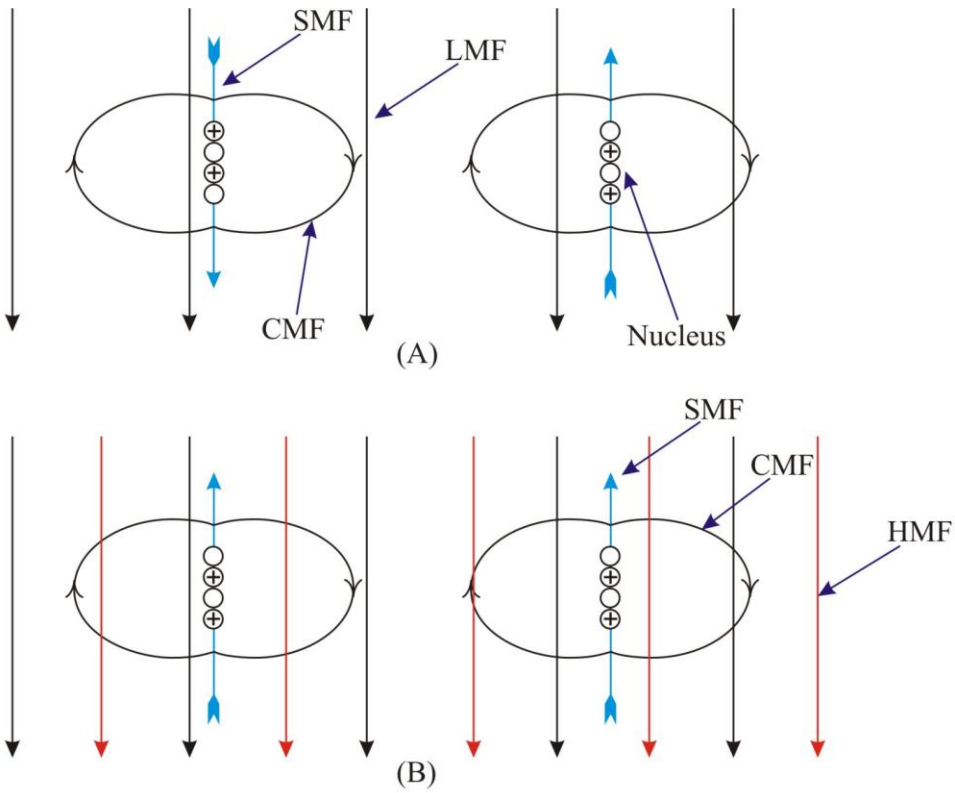

Fig.2. At micro scale, spinning magnetic field (***SMF***) [3] of helium; a diamagnetic element interacted with low magnetic field (***LMF***) in (A) no effect is caused in the nucleus. With high magnetic field (***HMF***) intensity as in (B) helium's ***SMF*** re-arranged itself, thus opposing the imposed field.

Since the three dimension distance d_K traveled by the magnetic field $\boldsymbol{B_{EI}}$ is covered in a time t, therefore it is postulated that, the three dimension distance d_K is given by

$$d_K = (v_x + v_y + v_z)\,t \qquad meters \qquad \{8\}$$

Where, v_x is the x direction velocity in m.s^{-1}, v_y is the y direction velocity in m.s^{-1}, v_z is z direction velocity in m.s^{-1}, t is the time in second.

$$K = q\,v_c\,B_{EI}\,(v_x + v_y + v_y)\,t \qquad Jouless \qquad \{9\}$$

Substituting Eq.{6} with $\boldsymbol{B_{EI}}$ in Eq.{9}, therefore the change of energy K_i is given by:

$$K = ((N_{C1}\,\gamma_{PS}\,d_K\,(q\,v_c\,B_{1\to n} + \frac{(80\%\,n_m)\,l\,q^4\,B_{1\to n}{}^2}{m^2\,c})) + ((N_{C2}\,\gamma_{PS}\,d_K\,(q\,v_c\,B_{1\to n} + \frac{(15\%\,n_m)\,l\,q^4\,B_{1\to n}{}^2}{m^2\,c})) + ((N_{C3}\,\gamma_{PS}\,d_K\,(q\,v_c\,B_{1\to n} + \frac{(5\%\,n_m)\,l\,q^4\,B_{1\to n}{}^2}{m^2\,c}))\sin\theta \qquad J \qquad \{10\}$$

Where, the kinetic energy K is in Joules.

Levels of energy built up given by Eq.{10} and shown in Figs.1, gained by gyrating charged particles, may be approximately computed as measured elsewhere [4], hence:

$$K_{TS} = K_1 + K_2 + K_3 + ... K_n + \varepsilon \quad \text{Joules} \qquad \{11\}$$

Where, K_1, K_2 …… K_n are energizations executed at each stage, $\varepsilon = \varepsilon_i$ where ε_i is the error of continuity approximation at step i, and the total approximate energy acquired or gained by the charged particle in the system K_{TS} (shown in Graph.1) is in Joules.

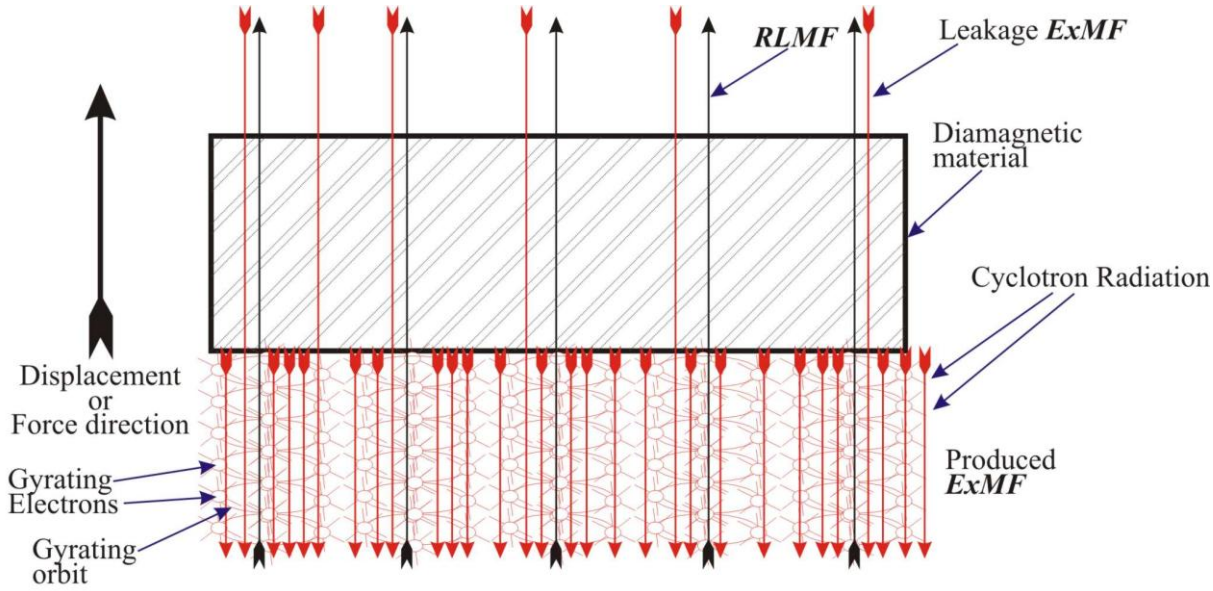

Fig.3. Rotating low magnetic field (***RLMF***) penetrating bismuth material then, interacting with the electrons, producing external magnetic field (***ExMF***) [4]. The produced ***ExMF*** interacts with the bismuth producing a translational (displacement) force, towards the shown direction.

2:3 SUSTAINABILITY OF ExMF

Charged particles energized to value K_{TS} given by Eq.{11}, will radiate synchrotron radiation [14], the quanta of radiated energy is known as:

$$E_C = f\ h = \frac{c}{\lambda} h \quad \text{Joules} \qquad (12)$$

Where, f is the radiated frequency in H_z, λ is the radiated wavelength in meters, *h* is Plank constant in $J.s^{-1}$, c is the speed of light in $m.s^{-1}$ and the radiated synchrotron energy E_C is in Joules.

Systems shown in Figs.1, 4, 5, 6, 7, 8 and 9 operate electric motors to generate ***RLMF*** which in turn produces ***ExMF*** whenever interaction is made with charged particles, thus energizing these particles to different values of K eV, M eV, G eV or T eV (as shown in Graph.1).
If electric motors (2-12), (2-12), (10-16) and (15-20) in Figs.1, 4, 5, 6 respectively, and (6-9), (7-10) and (7-10) in Figs. 7, 8 and 9 respectively, which generates ***RLMF*** are stopped, the energization process stops and increments in ***ExMF*** production also stops; as a result energies built up in the electrons and protons are depleted through the emissions of synchrotron radiation, as given by Eq.(12), and therefore the maximum period for an energized particle to continue producing the required magnitude of ***ExMF*** in order to sustain the system, is given by:

$$T_S = \frac{K_{TS} - K_M}{E_C} \quad s \qquad \{13\}$$

Where, K_{TS} is energy of the charged particle in Joules, K_M is the minimum required energy (to sustain ***ExMF*** operating the system) in Joules, E_C is quanta of radiated synchrotron energy, and the sustainability period T_S is in seconds. Additionally, while T_S indicating the maximum period during which ***RLMF*** could be stopped, Eq.{13} also gives the maximum period that charged particles are able to radiate emissions (or *aurora light*).

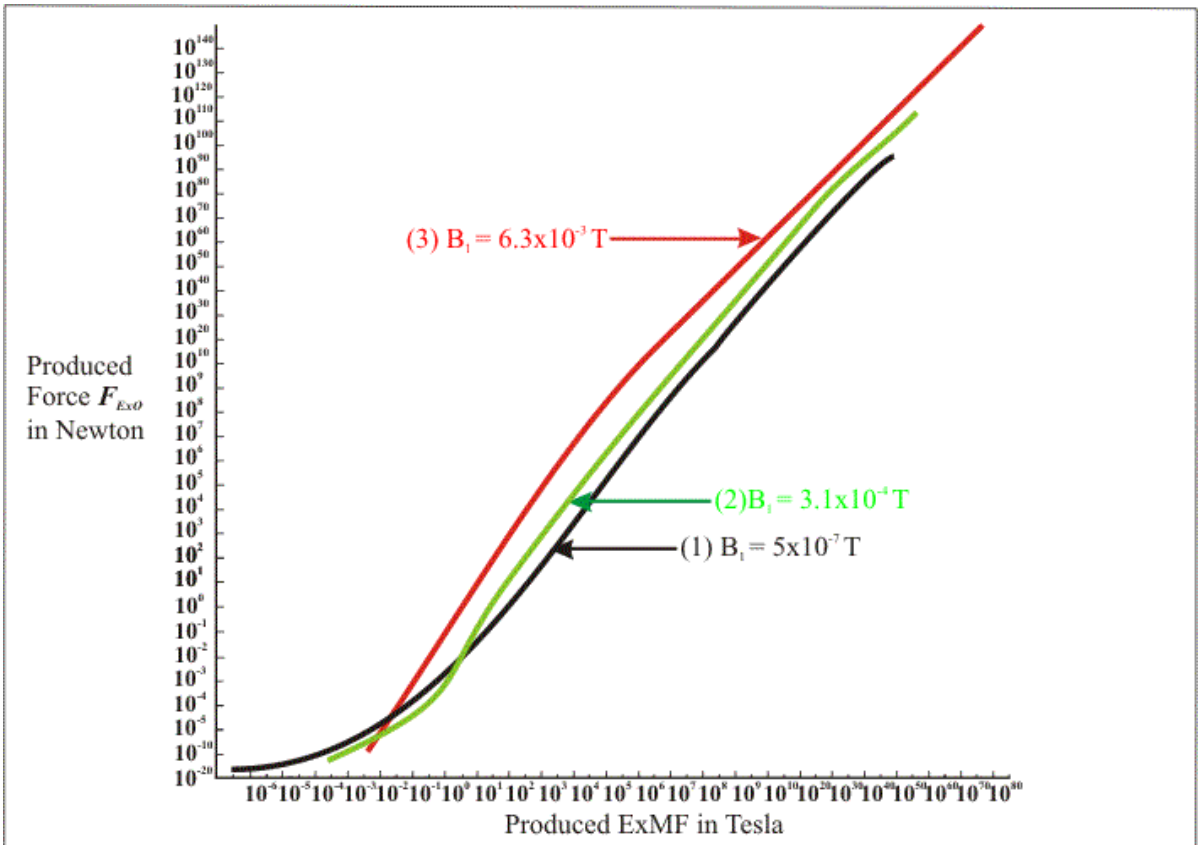

Graph 1. The relationship between produced External Magnetic Field (***ExMF***) and the resulted ***ExMF*** operational force (F_{ExO}), for three (3) given Rotating Low Magnetic Field (***RLMF***) or (B_t).

3: CHARGED PARTICLES AND ROTATING LOW MAGNETIC FIELD (RLMF)

3:1 CHARGED PARTICLES

As electrons (and protons or sometimes both) provide the basis for operating these systems mention should be made as to how these charged particles can be generated. There are four methods to obtain these electrons (and protons), these are:

(a) Space particles, which are divided into two groups:
   - I- Magnetosphere charged particles, mostly from the sun and other stars.
   - II- Inter-planetary, inter-stellar or inter-Galactic charged particles.

(b) Injection of charged particles from internal surfaces of an object, where they emerge externally - as demonstrated by Faraday in ice-pail experiment [15, 16].

(c) Accumulated charged particles using Van de Graff generation, and then transferring them externally by the above method.

(d) Ionization of air constituent, using electromagnetic radiation with wavelength near ultra-violet radiation $4x10^3$ - $2x10^3$ Å ($7.5x10^{14}$ – $1.5x10^{15}$ Hz) $4.969x10^{-19}$ – $9.939x10^{-19}$ J (3.102 - 6.203 eV) to obtain required electrons.

3:2 OPERATING RLMF

The solenoids shown in Figs. 1, 4, 5, 6, 7, 8 & 9 are fixed on shafts of the second electric motor, when the motor is switched into an electric current (from a battery or electric generator), ***RLMF*** is produced. Rotational or movable three dimension distances (d_K) that represents the ***RLMF*** movements. This d_K is related to the arm radius ($\boldsymbol{r_c} = \boldsymbol{r_x} + \boldsymbol{r_y} + \boldsymbol{r_y}$) of the solenoids and the speeds (in frequency $f_c = \boldsymbol{f_x} + \boldsymbol{f_y} + \boldsymbol{f_z}$) for the motors, since $v/r_c = 2\pi f_c = d/r_c$ therefore, d_K is given by:

$$d_K = d_x + d_y + d_z = 2\pi\,(\,f_x r_{cx} + f_y r_{cy} + f_z r_{cz}\,) \qquad m \qquad \{14\}$$

Where $\boldsymbol{d_x}$ is the distance rotated in ***x*** direction, $\boldsymbol{d_y}$ is the distance rotated in y direction, $\boldsymbol{d_z}$ is the distance rotated in z direction, $\boldsymbol{r_{cx}}$ is the radius rotated by the solenoid in the ***x*** direction, $\boldsymbol{r_{cy}}$ is the radius rotated by the solenoid in the y direction and $\boldsymbol{r_{cz}}$ is the radius rotate by the solenoid in the ***z*** direction. The ***RLMF*** produced by the solenoid as the $\boldsymbol{B_1}$ in x direction given by:

$$B_1 = \frac{\mu_o\, n\, I}{4\, r_c} \quad T \qquad (15)$$

Where, ***n*** is the turning density of lines (or ***N/l***), ***I*** is the current in amperes.
Substituting $\boldsymbol{r_c}$ in Eq.(15) with r_c from Eq.{14}, therefore ***RLMF*** ($\boldsymbol{B_1}$) is given by

$$RLMF = B_1 = \frac{\mu_o\, \pi\, f_c\, n\, I}{2\, d_K} \qquad T \qquad \{16\}$$

4: GENERATION OF ELECTRICITY THROUGH ExMF

A simplified electricity generator is shown in Fig. 4, composed of solenoid 13 fixed onto electric motor 12. When the system is switched on by battery 3, the ***RLMF*** 14 rotates, interacts with electrons (ionized by ionizer 15), thus producing ***ExMF*** 16, leading to the energization of the electrons [4]. Since the produced ***ExMF*** 16 rotates with the motor 12, it cuts two types of conductors 19 which each have N number of turns, thus inducing electromotive force 20 across conductors 19, with the value expressed by:

$$\xi = N\,\frac{\Delta\,\Phi}{\Delta\,t} = N\,\frac{\Delta\,(B_{EI} \times 10^8)}{\Delta\,t} = B_{EI}\; l\; v_m \qquad V \qquad \{17\}$$

Where, Φ is flux density in Weber, N is number of wire turns, t is time in second, $\boldsymbol{B_{EI}}$ is in Tesla, with the value10^8 being the number of lines of force in m^2 (equivalent to one Tesla) that could produce one volt [5], l is the length of the conductor cut by the rotating ***ExMF***, v_m is the velocity of ***ExMF*** (or the speed of the motor) and the ***e.m.f.*** $\boldsymbol{\xi}$ is in volts (V).
Since different magnitudes of $\boldsymbol{B_{EI}}$ are producible, therefore any amount of $\boldsymbol{\xi}$ can be produced, hence if this system is connected to a load, electric current will flow across it. This work forms a theoretical basis for Searl's ***SEG*** [11, 12] with certain modifications [13].

5: THE TRANSLATIONAL FORCES of DIAMAGNETIC MATERIALS

The magnetic force $F = (M)\nabla B$, (where magnetic moment $M = (\chi / \mu_o)VB$) which acts on diamagnetic materials [17] produces a force given by:

$$F_T = \frac{\chi_D V_D}{2\mu_o}\frac{B^2}{l} \qquad N \qquad (18)$$

Where, V_D is the interaction volume of diamagnetic material in m^3, χ_D is the susceptibility of the diamagnetic material, μ_o is permeability of free space $(4\pi x10^{-7}\ Hm^{-1})$, and ***B*** is the applied magnetic field.
Measurement of negative susceptibility of diamagnetic material [18], is carried out using the translational force (***F_T***) method [19] given by:

$$F_T = (\chi_D - \chi_a)\frac{\mu_o V_D}{2}\frac{\partial H^2}{\partial x} \qquad N \qquad (19)$$

Where, χ_D is the susceptibility of the diamagnetic material, χ_a is the susceptibility of material adjacent to the diamagnetic surface (i.e. the air), $\delta H^2 / \delta x$ is the field gradient in $amp^2/meters^3$, and the translational force (***F_T***) is in Newtons.

6:0 ExMF-PROPULSION SYSTEM (ExMF-PS)

6:1 HISTORICAL EXPERIMENTS

That the translational force given by Eq.(19) is momentary and enormous was demonstrated by P. Kapitza at Cambridge University, when he immersed a 3 mm diameter glass rod in liquid oxygen in a Dewar vacuum flask, and upon subjecting it to magnetic field of 30 Tesla (300000 gauss) the glass rod was ejected momentarily to height of 7-8 meters [15, 20].

It should be pointed out that several materials are diamagnetic, graphite and bismuth especially being the strongest effected. All repel and are repelled by a strong magnetic field [15, 21], due to their negative susceptibility [18] which is a measure of the translational force resulting from imposing magnetic field on that material [19]. And even though materials like wood and plastic expel only a very small portion (0.00001%) of an applied magnetic field [22] these characteristics have nonetheless, in diamagnetic studies, explained why such materials and even several living tissues samples can be made to levitate within a strong magnetic field [23].
The repulsion of the diamagnetic atom on a micro scale is shown in Fig.2, while Fig.3 shows the displacement of a diamagnetic material due to the translational force.
Levitation is used in the SUPERCONDUCTING **MAG**NETICALLY **LEV**ITATED VEHICLE (MAGLEV) [24], and intended by NASA in magnetic levitation (or maglev) used for launching and lifting of vehicles for orbit [25] aimed to produce high acceleration and cruising speed [26].

6:2 OPERATIONAL PARTICLES

The translational force (***F_T***) given by Eq.(19), can be produced when ***ExMF*** interacts with diamagnetic material, the ***ExMF*** given by Eq.{6} is produced by capturing charged particles through a ***RLMF***, while under energization processes [4], as shown in Fig.1.
To operate such a system, electrons (or protons) are required. This could be obtained from one of four sources mentioned in section 3:1. In 3:1-d ultra-violet radiation is obtained from a ionizer shown by 15 in both Figs 1 and Fig.4, by 18 in Fig.5, by 23 in Fig.6 and 5 in Figs. 8

and 9, while Fig. 7 used bigger ionizer mechanism fixed on portholes 5, these ionizers ionized air constituent for required electrons.

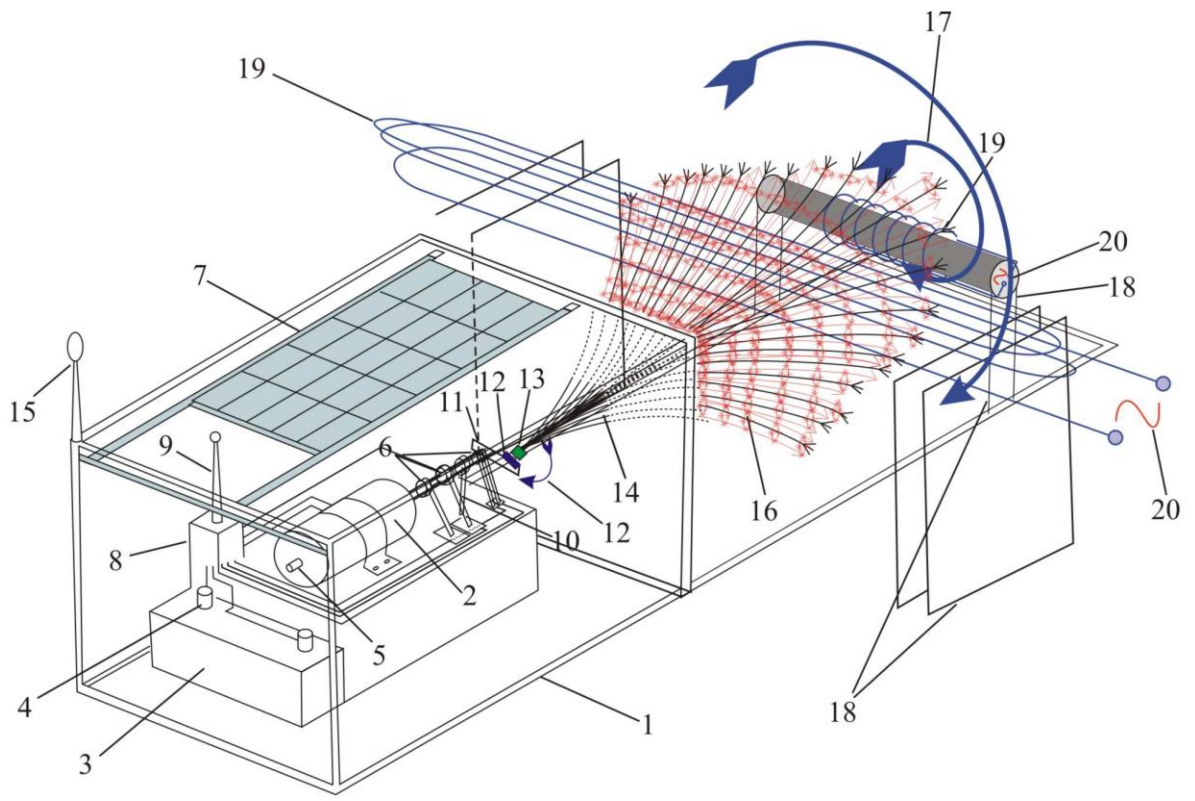

Fig.4. As in Fig.1, produced ***ExMF*** 16 while rotating, it cuts two systems of conductors, thus electromotive force (*e.m.f.*) is induced between conductor terminals.

6:3 THE CONCEPT OF ExMF PROPULSION

The translational force produced mentioned above by Kapitza [15, 20] and given by Eq.(19) is momentary and tremendous but not continuous. If the glass rod, the vacuum flask, and the subjected magnetic field of 30 Tesla are all arranged to be linked mechanically together, the resultant force will agitate the glass rod (like bringing together two magnets of same polarity). But if both the glass volume is increased and the applied magnetic field is increased, there results an ***ExMF*** force ($\boldsymbol{F_{Ex}}$) which moves the whole system vertically, because the glass rod being diamagnetic will behave like a magnet [27], and interacts magnetically [2]. Since the resulting $\boldsymbol{F_{Ex}}$ requires the application of an enormous, momentary, and continuously linked ***ExMF*** the concept of an ***ExMF*** propulsion system (***ExMF-PS***) is defined as the propulsion caused by repulsive forces resulting from the interaction of continual ***ExMF*** upon the volume of the diamagnetic material - so that the material produces a strong magnetic field to oppose and repel the ***ExMF.***

6:4 THE ExMF OPERATIONAL ORCE

Fig.5, show the nature and production of $\boldsymbol{F_{Ex}}$, where the driving machine consists of an electric motor 10, a rotor spindle 11 connected with cross bar (or bars) 14 to which a motor 15 with solenoid 16 is fixed at each end of the bar. A plate of Bismuth 2 (a diamagnetic material with highest susceptibility [28]) is attached at the front, whereby the surface area of the bismuth is one square meter and it is greater than the circles 20, formed by the ***RLMF*** produced by rotation of both solenoids on it as shown in Fig.5-C.

The diamagnetic materials expel only a portion of the ***ExMF*** [22], therefore, the ***RLMF*** produced by the solenoid continually emerging from the bismuth surface as shown in Figs.5, 6, 7, 8 and 9, forms a circular path, shown by example 20 in Fig.5.C.
Electrons ionized by 18 will be captured by the ***RLMF***, so that an intense ***ExMF*** will be produced as expressed in Eq.{6}, while electrons will be energized to value given by Eq.{11}, and shown in Graph.2.

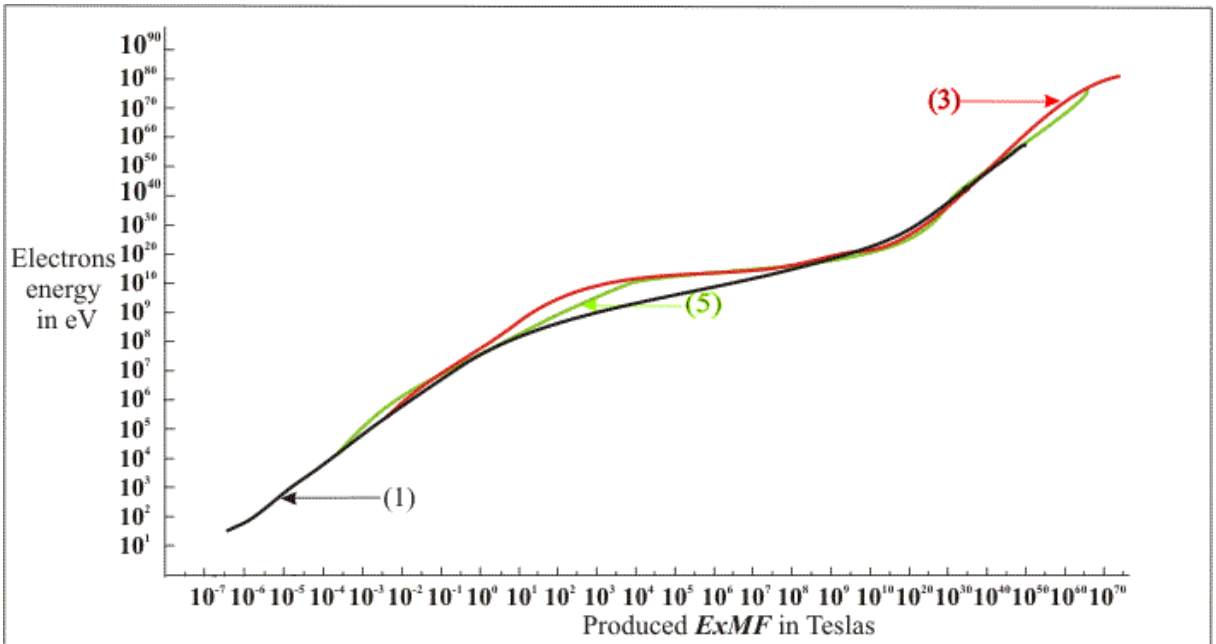

Graph 2. Relationship between energization of electrons and building up of external magnetic field (***ExMF***).

Interaction of magnetic fields with a diamagnetic element on a micro-level is shown in Figs.2, while interaction on a macro-level is shown in Fig.3; therefore in Fig.5 the produced ***ExMF*** 19 interacts with the Bismuth 2 producing the ***ExMF*** operational force ($\boldsymbol{F_{ExO}}$) 22, this force falls on the bismuth plate's magnetic-volume, moving the roller 8 of the machine in direction 23.
With regard to Eq.(19), the produced ***ExMF*** operational force ($\boldsymbol{F_{ExO}}$) is given by:

$$F_{ExO} = (\chi_D - \chi_a)\frac{V_D}{2\,\mu_o}\frac{B_{EI}^{\;2}}{l} \qquad N \qquad \{20\}$$

Where, χ_D is the susceptibility of the bismuth, χ_a is the susceptibility of the air between the diamagnetic material and the produced ***ExMF***, V_D is the volume of the bismuth upon which ***ExMF*** falls in m^3, l is the length of the produced ***ExMF*** (or the vertical field gradient) and the produced ***ExMF*** operational force ($\boldsymbol{F_{ExO}}$) is in Newtons.

7:0 THE FLYING OBJECTS (FO) MECHANISM AND FORCE

7:1 STRUCTURE OF THE FLYING OBJECTS

Two types of flying objects (***FO***) are described in this paper; the one with the cylindrical shape, named Mothership Jedia (***M-Jedia***) shown in Fig.7, while the other is a saucer of an oval shape named Ski Kush (***S-Kush***) shown in Figs.8.
Both ***FOs*** consist of an external body made of bismuth 1 acting as a propellant and internal body 2 made of ferromagnetic material to carry the payloads of occupants and instruments and serves to divert the intense (and potentially harmful) ***ExMF*** from the interior. Both bodies

are connected with a support 3. As shown in fig.7, the ***FOs*** contain sets of electric motors 6-9, 15-18-26, 33-36 operating sets of solenoids 10- 19, 27 and 37 that produce ***RLMF*** 11, 20 and 29. For fig.8 electric motors 7-10, 17-20 and 28-31 each operates sets of solenoids 11- 21 and 32 that produce ***RLMF*** 12 and 22. To ionize ambient air for electron production, an ionizer is fitted on portholes 5 of ***M-Jedia***, while electromagnetic radiation emitter 5 is fitted atop ***S-Kush***. These sets of ionizers produce the charged particles required for the ***FO's*** propulsion forces.

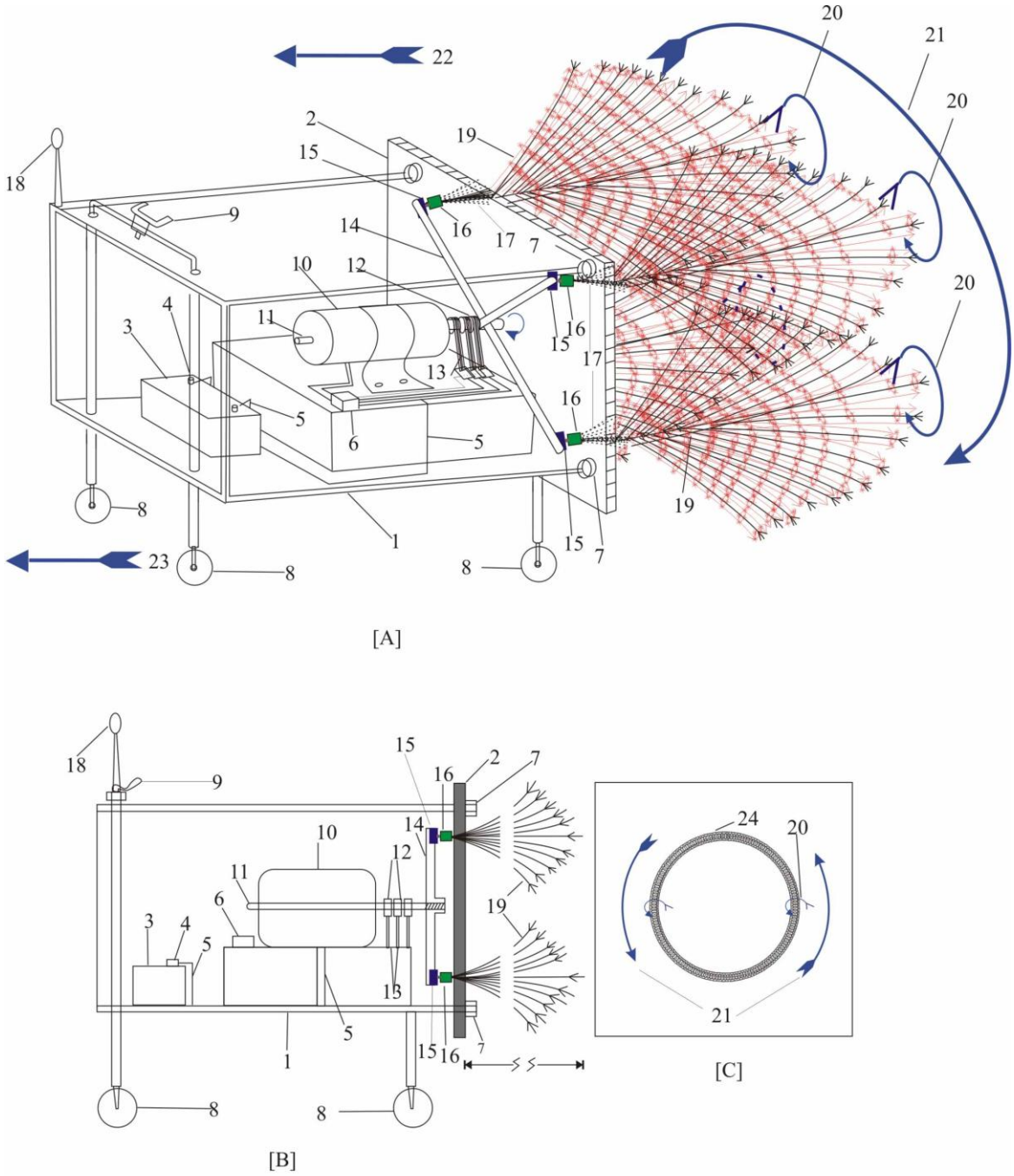

Fig.5 External Magnetic Field Propeller machine (***ExMF-PM***). In (A) Low magnetic field (***RLMF***) interacts with electrons external of bismuth, producing ***ExMF*** [4]. The ***ExMF*** interacts with the bismuth, producing ***ExMF*** operational force (***FExO***) that moves ***ExMF-PM*** roller forwardly. (B) Shows the side elevation of the ***ExMF-PM***, while (C) shows trace of ***RLMF*** on the bismuth surface.

7:2 STARTING TO FLY WITH THE FLYING OBJECTS

For both ***FOs*** to move from the ground and start flying, the propulsion mechanism must be used in accordance to the following requirements. First an ***ExMF*** ascending force ($\boldsymbol{F_{ExA}}$) must be operated, to raise the ***FOs*** from the ground. At the desired altitude the $\boldsymbol{F_{ExA}}$ can be reduced to the degree that it balances with the local gravitational force ($\boldsymbol{F_g}$), thus an ***ExMF*** levitation force ($\boldsymbol{F_{ExL}}$) results which allows the ***FO*** to hover in the air some altitude above the ground level. At this altitude, the ***FO*** can then operate the ***ExMF*** driving force ($\boldsymbol{F_{ExD}}$) for forward drive. Due to the size and shape of ***M-Jedia***, an ***ExMF*** stability force ($\boldsymbol{F_{ExS}}$) will be required to keep it balanced while in flight or while maneuvering into special inclined positions. Stoppage or reducing the speed of both ***FOs*** require the usage of the ***ExMF*** Brake force ($\boldsymbol{F_{ExB}}$), which produces a force opposite to the main drive force. A combination of both $\boldsymbol{F_{ExA}}$ ($\boldsymbol{F_{ExL}}$) and $\boldsymbol{F_{ExD}}$ will give various flight trajectory angles and velocities, and is given as the ***ExMF*** resultant force ($\boldsymbol{F_{ExR}}$).

7:3 FORCES OF THE FLYING OBJECTS

Force for both ***FOs*** is based on the combined production of the following forces:

1- ***ExMF*** ascending force ($\boldsymbol{F_{ExA}}$):

a- For ***M-Jedia***, ***RLMF*** 11 interacts with electrons 12 ionized by near ultra-violet radiator on each porthole 5, producing ***ExMF*** 13 which interacts with bismuth 1 producing $\boldsymbol{F_{ExA}}$ force 14, thereby ascending ***M-Jedia*** upwards.

b- For ***S-Kush***, ***RLMF*** 12 that interacts with electrons 13 ionized by electromagnetic radiation 5 produce ***ExMF*** 14 that interacts with bismuth 1 producing ***ExMF*** $\boldsymbol{F_{ExA}}$ force 16. Excessive (or leakage) ***ExMF*** 15 is diverted from internal space 6 by ferromagnetic shell 2.

In both ***FOs*** intense ***ExMF*** will be produced given by Eq.{6} on the external surface of the lower hull.

Interaction of the produced ***ExMF*** with the bismuth (hull) produces ***ExMF*** operational force ($\boldsymbol{F_{ExO}}$), given by Eq.(20), but this force is lifting ***FO*** upwards, therefore it is the ascending force $\boldsymbol{F_{ExA}}$. This force moving the ***FO*** upwards is given by:

$$F_{ExA} = (\rho V_D\ g) - ((\chi_D - \chi_a)\frac{V_D}{2\,\mu_o}\frac{B_{EI}{}^2}{l}) \qquad N \qquad \{21\}$$

Where, $\boldsymbol{F_{ExA}}$ is the ***ExMF*** ascending force in Newtons.

Substituting $\boldsymbol{B_{EI}}$ in Eq.{21} with Eq.{6}, the ***ExMF*** $\boldsymbol{F_{ExA}}$ is given by:

$$F_{ExA} = (\chi_{Bi} - \chi_a)\gamma_{PS} l^2 \frac{V_{Bi}}{2\,\mu_0}(N_{C1}(B_{1\to n} + \frac{(80\%\ n_m)\,q^3\ B_{1\to n}{}^2}{m^2\ v_c\ c})) + (N_{C2}(B_{1\to n} + \frac{15\%\ n_m)\,q^3\ B_{1\to n}{}^2}{m^2\ v_c\ c})) + (N_{C3}(B_{1\to n}{}^2 + \frac{(5\%\ n_m)\,q^3\ B_{1\to n}{}^2}{m^2\ v_c\ c})) - (\rho V_D\ g) \qquad N \qquad \{22\}$$

Where, $\boldsymbol{F_{ExA}}$ is the ***ExMF*** ascending force in Newtons.

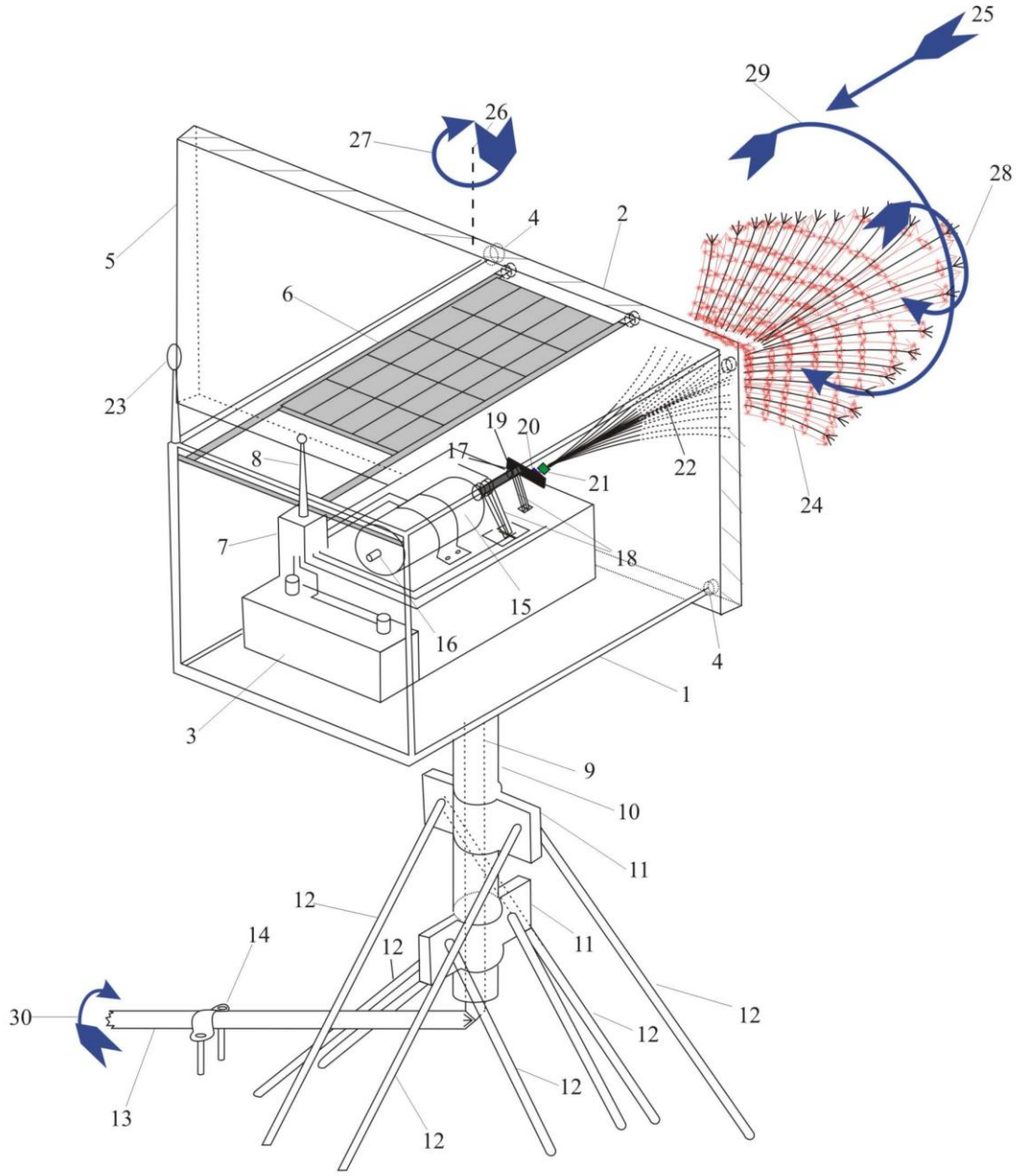

Fig.6 External Magnetic Field Rotary Propel machine (***ExMF-RPM***), remotely controlled, the produced ***ExMF*** interacted with the bismuth, thus rotating upper assemble, hence the shaft.

2- ***ExMF*** Levitation force ($\boldsymbol{F_{ExL}}$):

a- For ***M-Jedia***, ***RLMF*** 11 interacts with ionized electrons producing ***ExMF*** 13 which interacts with bismuth 1 producing $\boldsymbol{F_{ExA}}$. This force is then made to balance with the local gravitational force ($\boldsymbol{F_g}$), thus producing $\boldsymbol{F_{ExL}}$, that levitates ***M-Jedia*** some altitude above the ground.

b- For ***S-Kush***, ***RLMF*** 11 interacts with ionized electrons externally producing ***ExMF*** 13 that interacts with bismuth 1 producing ***ExMF*** $\boldsymbol{F_{ExA}}$. This force is then made to balance with the local gravitational force ($\boldsymbol{F_g}$), thus producing $\boldsymbol{F_{ExL}}$, that levitates ***S-Kush*** some altitude above the ground.

The gravitation force (F_g) [16] acting on any material is given by

$$F_g = m\,g = \rho\,V_D\,g \quad N \qquad (23)$$

Where, m is the mass in kg, g is the universal gravitational constant in N.m^2/kg^2, ρ is the density of the material in kg.m^{-3}, V_D is the volume of the material in m^3, and the gravitational force (***F_g***) is in Newtons.
If the ***F_{ExA}*** given by Eq.{21}is produced in such way so as to balanced the gravitational force given by Eq.(23) at a specific altitude then the force is ***ExMF F_{ExL}***, which is given by:

$$F_{ExL} = (\rho V_D\,g) - ((\chi_D - \chi_a)\frac{V_D}{2\,\mu_o}\frac{B_{EI}{}^2}{l}) = 0 \quad N \qquad \{24\}$$

Where, ***F_{ExL}*** is the ***ExMF*** levitation force in Newtons.

Substituting ***B_{EI}*** in Eq.{24} with Eq.{6}, the ***ExMF F_{ExL}*** is given by:

$$F_{ExL} = (\rho V_D\,g) - (\chi_{Bi} \quad \chi_a)\gamma_{PS}\,l^2\,\frac{V_{Bi}}{2\mu_0}(N_{C1}(B_{1\to n} + \frac{(80\%\,n_m)\,q^3\,B_{1\to n}{}^2}{m^2\,v_c\,c})) + (N_{C2}(B_{1\to n} + \frac{(15\%\,n_m)\,q^3\,B_{1\to n}{}^2}{m^2\,v_c\,c})) + (N_{C3}(B_{1\to n} + \frac{(5\%\,n_m)\,q^3\,B_{1\to n}{}^2}{m^2\,v_c\,c})) = 0 \quad N \qquad \{25\}$$

Where, ***F_{ExL}*** is the ***ExMF*** levitation force in Newtons.

3- ***ExMF*** Driving force (***F_{ExD}***):

a- For ***M-Jedia***, ***RLMF*** 20 interacts externally with electrons 21 producing ***ExMF*** 22 that interacts with bismuth 1 producing ***ExMF F_{ExD}*** 23. Excessive (or leakage) ***ExMF*** 42 is diverted away by ferromagnetic material 2.

b- For ***S-Kush***, ***RLMF*** 22 interacts with electrons 23 producing ***ExMF*** 24 that interacts with bismuth 1 producing ***ExMF F_{ExD}*** 26. Excessive (or leakage) ***ExMF*** 25 is absorbed by ferromagnetic material 2.

As shown above, to forward drive ***M-Jedia*** and ***S-Kush***, an intense ***ExMF*** is produced given by Eq.{6} on the external surface of the rear part of both ***FO***s which are made from bismuth.
Interaction of produced ***ExMF*** with the bismuth, produces ***ExMF*** operational force (***F_{ExO}***), given by Eq.(20). Therefore substituting ***B_{EI}*** in the Eq.{20}, with the right-hand side of Eq.{6}, the ***ExMF*** driving force (***F_{ExD}***), is given by:

$$F_{ExD} = (\chi_{Bi} - \chi_a)\gamma_{PS}\,l^2\,\frac{V_{Bi}}{2\,\mu_0}(N_{C1}(B_{1\to n} + \frac{(80\%\,n_m)\,q^3\,B_{1\to n}{}^2}{m^2\,v_c\,c})) + (N_{C2}(B_{1\to n} + \frac{(15\%\,n_m)\,q^3\,B_{1\to n}{}^2}{m^2\,v_c\,c})) + (N_{C3}(B_{1\to n} + \frac{(5\%\,n_m)\,q^3\,B_{1\to n}{}^2}{m^2\,v_c\,c})) \quad N \qquad \{26\}$$

Where, ***F_{ExD}*** is the ***ExMF*** driving force in Newtons.

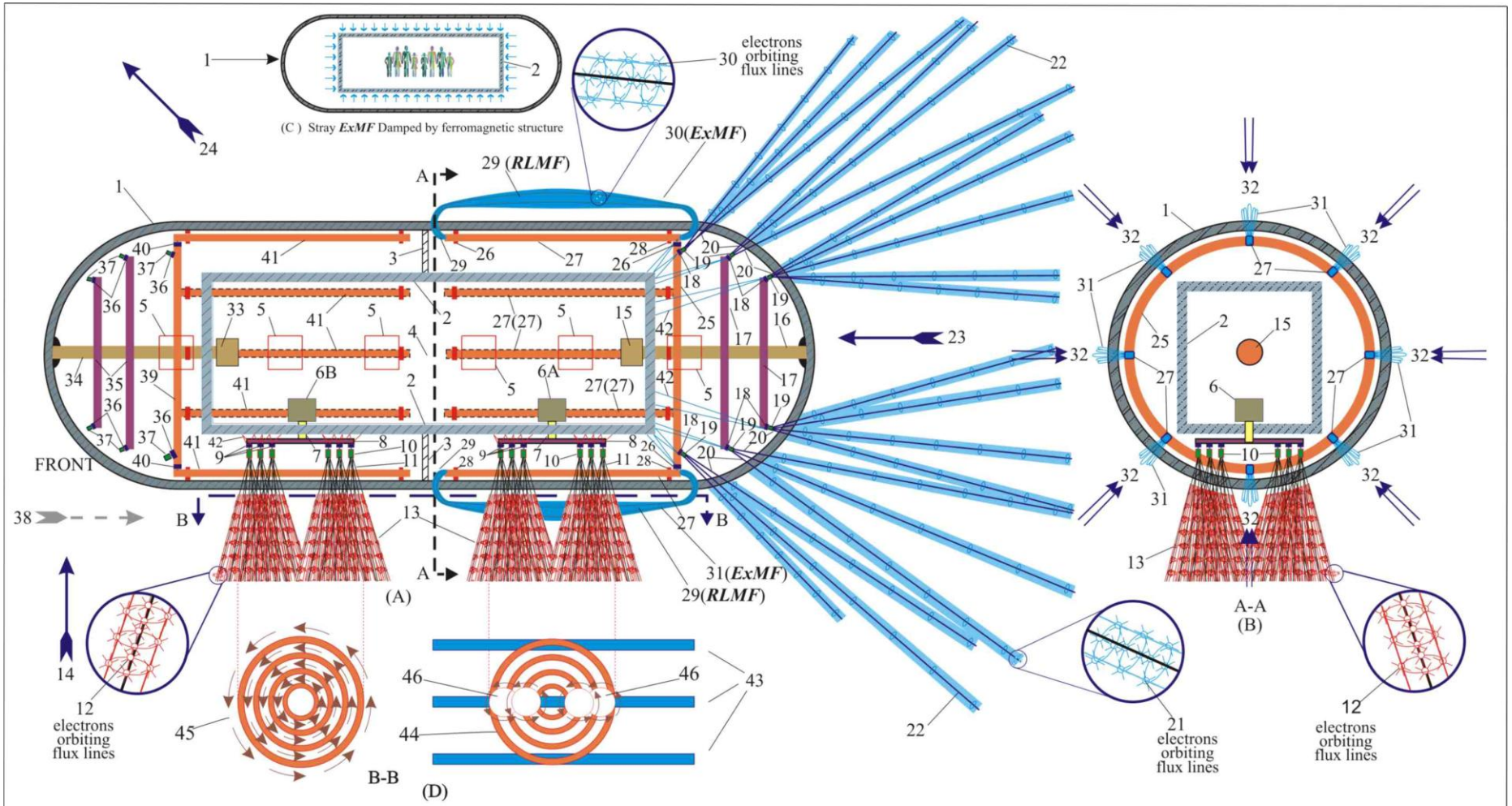

Fig.7. The Mothership Jedia (***M-Jedia***). In (A) The four mechanisms for the motion and stability of ***M-Jedia***, are the external magnetic field (***ExMF***) ascending force (***FExA***) (or levitation if balanced with gravitational force), ***ExMF*** driving force (***FExD***), the ***ExMF*** brake force (***FExB***) and the ***ExMF*** stability force (***FExS***). In (B) the ***FExS*** acting toward the center of ***M-Jedia***, causing stability while at driving, hovering or during ±45° hanging state. Leakages or escaped ***ExMF*** are diverted by the ferromagnetic internal layer, to protect occupants and instruments as shown in (C,). Samples produced by rotating ***ExMF*** on cornfields are shown in (D).

4- ***ExMF*** Stability force (***F_{ExS}***):

bismuth produces the ***ExMF*** (***F_{ExS}***) forces (represented by the eight vectors 32 in Fig.7-B).

Interaction of produced ***ExMF*** with the bismuth, produces ***ExMF*** (***F_{ExO}***), given by Eq.(20). Therefore substituting ***B_{EI}*** in the Eq.{20}, with the right hand side of Eq.{6} the ***ExMF F_{ExS}*** is given by:

$$F_{ExS} = (\chi_{Bi} - \chi_a)\gamma_{PS}\, l^2 \frac{V_{Bi}}{2\mu_0}\left(N_{C1}\left(B_{1\to n} + \frac{(80\%\ n_m)q^3 B_{1\to n}{}^2}{m^2 v_c c}\right)\right) + \left(N_{C2}\left(B_{1\to n} + \frac{(15\%\ n_m)q^3 B_{1\to n}{}^2}{m^2 v_c c}\right)\right)$$

$$+\left(N_{C3}\left(B_{1\to n} + \frac{(5\%\ n_m)q^3 B_{1\to n}{}^2}{m^2 v_c c}\right)\right) \quad N \qquad \{27\}$$

Where, ***F_{ExS}*** is the ***ExMF*** stability force in Newtons.

a- For ***S-Kush***, because its size is smaller, the stability force will need to result from the design and propulsion power.

5- ***ExMF*** Brake force (***F_{ExB}***), as both ***FOs*** are propelled by enormous force, a special mechanism will be needed to reduce speed or stop them:

a- For ***M-Jedia***, ***RLMF*** interact with ionized electrons producing ***ExMF*** that could interact with bismuth 1 then produces ***ExMF F_{ExB}*** that can stop or reduce the speed of ***M-Jedia***. Excessive (or leakage) ***ExMF*** is diverted by ferromagnetic material 2.

b- For ***S-Kush***, ***RLMF*** interacts with ionized electrons producing ***ExMF*** that interacts with bismuth 1 then produces ***ExMF F_{ExB}*** that can stop or reduced the speed of ***S-Kush***. Excessive (or leakage) ***ExMF*** is absorbed by ferromagnetic material 2.

To stop or reduce the speed of both ***M-Jedia*** and ***S-Kush***, an intense ***ExMF*** is produced given by Eq.{6} on the external surface of the front part of both objects which are made from bismuth.

Interaction of the produced ***ExMF*** with the bismuth, produces ***ExMF F_{ExO}***, given by Eq.(20), therefore substituting ***B_{EI}*** in the Eq.{20}, with the right hand side of Eq.{6} the ***ExMF*** brake force (***F_{ExB}***) is given by:

$$F_{ExB} = (\chi_{Bi} - \chi_a)\gamma_{PS}\, l^2 \frac{V_{Bi}}{2\mu_0}\left(N_{C1}\left(B_{1\to n} + \frac{(80\%\ n_m)q^3 B_{1\to n}{}^2}{m^2 v_c c}\right)\right) + \left(N_{C2}\left(B_{1\to n} + \frac{(15\%\ n_m)q^3 B_{1\to n}{}^2}{m^2 v_c c}\right)\right)$$

$$+\left(N_{C3}\left(B_{1\to n} + \frac{(5\%\ n_m)q^3 B_{1\to n}{}^2}{m^2 v_c c}\right)\right) \quad N \qquad \{28\}$$

Where, ***F_{ExB}*** is the ***ExMF*** brake force in Newtons.

6- ***ExMF*** Resulting Force (***F_{ExR}***):

a- For Jedia, as shown in Fig.7, ascending force 14 lifts ***M-Jedia*** upwards while the driving force 23 moves ***M-Jedia*** forward; therefore the resultant force 24 gives the true trajectory of the ***M-Jedia***.

b- For ***S-Kush***, as shown in Fig.8, ascending force 16 lifts ***S-Kush*** upwards while the driving force 26 moves ***S-Kush*** forward; therefore the resultant force 27 gives the true trajectory of the ***S-Kush***.

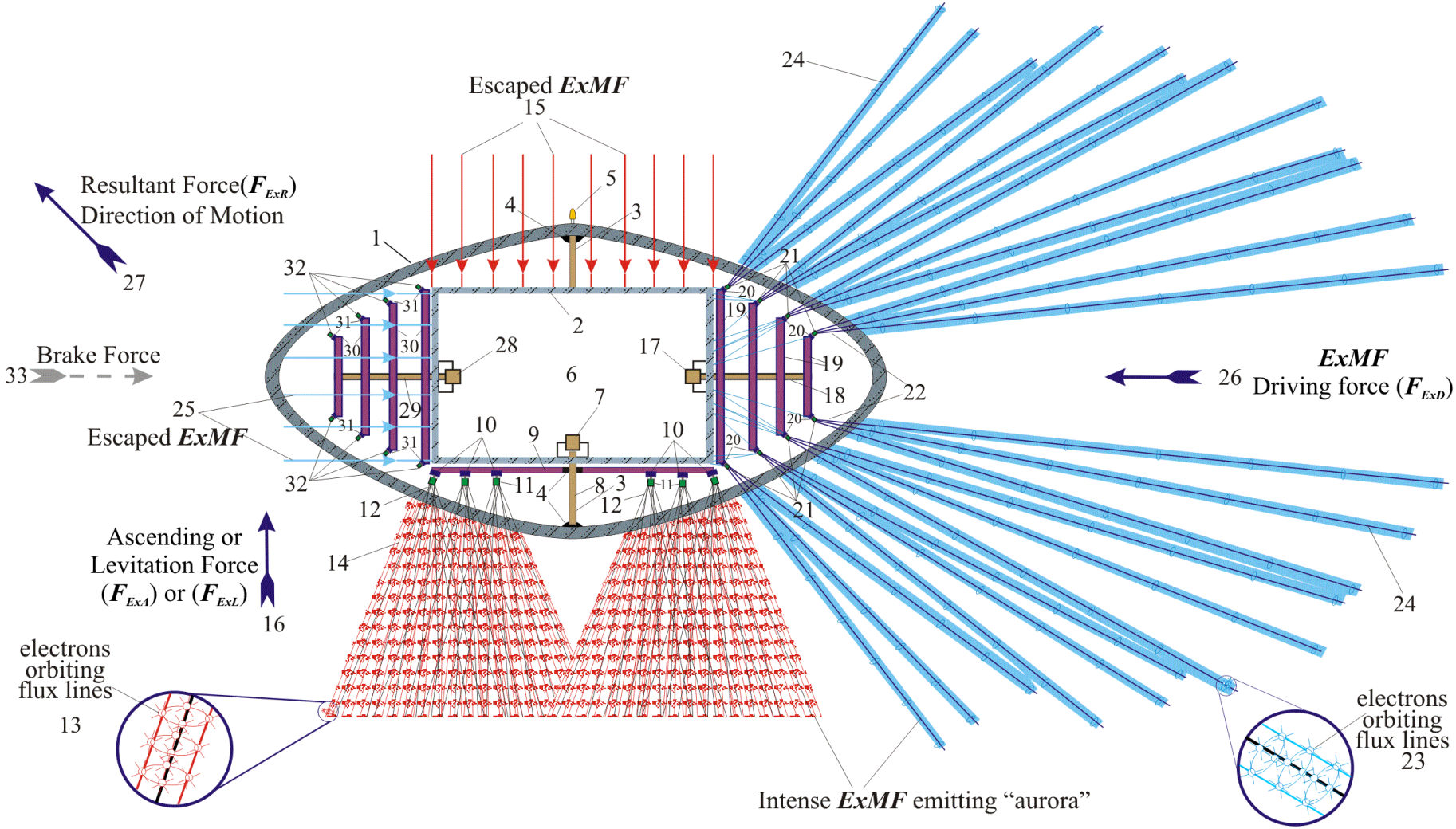

Fig.8. The Ski-Kush (***S-Kush***), showing the three mechanisms that cause motion of ***S-Kush***, they are, the ***ExMF*** ascending force (***FExA***) (or levitation ***FExL***), the ***ExMF*** driving force (***FExD***) and the ***ExMF*** brake force (***FExB***). and 24 are diverted by ferromagnetic 2. Gyrating electron radiated synchrotron radiation [14], while the flight path is given by resultant force 27.

8:0 ExMF, ENERGY AND FORCE PRODUCTION IN GRAPH

In the following example it is intended to give an estimated force and power of the ***ExMF-PS*** for the machines and flying objects shown in Figs. 5, 6, 7, 8 and 9 when under operation, providing the following parameters are followed.

The magnetic field $\boldsymbol{B_1}$ = 5x10^{-7}, 3.1x10^{-4} and 6.3x10^{-3} T, length of magnetic lines of force $\boldsymbol{l}$ = 3m, the relative magnitudes of the primary and secondary ***ExMF*** $\boldsymbol{\gamma_{ps}}$ = 2 and the captured velocity v_c = 400,000 m.s^{-1}.

Radius of the rotating arms $\boldsymbol{r_{c1}}$ = 0.5 m, $\boldsymbol{r_{c2}}$ = 0.1 m (on which solenoids are fixed), motor frequency $\boldsymbol{f_1}$ = 30 Hz, $\boldsymbol{f_2}$ = 50 Hz, therefore from Eq. {14} rotating distance $\boldsymbol{d_D}$ = 125.6 (d_1 = 94.24 and d_2 = 31.4) m rs^{-1}.

Each curve by Graph 1, comprise of sequences of intense ***ExMF*** production, energization of electrons (Graph 2), and production of ***ExMF*** $\boldsymbol{F_{ExO}}$, resulting from interaction of the bismuth with the intense ***ExMF*** are resulted.

Each sequence starts with specific ***RLMF*** ($\boldsymbol{B_1}$) which is related to a specific number of magnetic lines of force $\boldsymbol{N_A}$ [5] (distributed into three groups $\boldsymbol{N_{c1}}$, $\boldsymbol{N_{c2}}$ ***and*** $\boldsymbol{N_{c3}}$), while (for simplicity) number of ionized electrons $\boldsymbol{n_{m1}}$, $\boldsymbol{n_{m2}}$ ***and*** $\boldsymbol{n_{m3}}$ increases from 8x10^4, 1.5x10^4 and 5x10^3 to 8x10^{15}, 1.5x10^{15} and 5x10^{14} in each sequence.

Graph 1, shows among other the instant production of both the ***ExMF*** and the ***ExMF*** $\boldsymbol{F_{ExO}}$, it also shows the capability of sudden and enormous acceleration if used by ***M-Jedia*** or ***S-Kush*** in Figs.7 and 8 respectively.

The magnitudes of the forces in the Graph 1, results from one square meter of the bismuth shell of either ***M-Jedia*** or ***S-Kush***, and the force is multiplied by the Force working area (upon which ***ExMF*** interacts).

Some data are of course an approximation, since electrons gyrating around magnetic lines of force could stray from the system into the surrounding medium, or even be lost when they reach the stage of electron fusion at high states of excitation [4].

9:0 THOUGHT TRIP TO MARS AND BEYOND

At present a mission to Mars may last 1000-days, so how long dose it takes ***M-Jedia*** to reach Mars?

The enormous produced force shown in Graph 1, allows for propulsion of different size of masses such as the ***M-Jedia*** shown in Fig.7.

The length of ***M-Jedia*** could exceed one hundred (100) meters with a radius of twelve and half (12.5) meters.

Jedia Spaceship can carry twenty ***S-Kush*** shown in Fig.8 each of which weight twenty five tons. Therefore the total weight of ***M-Jedia*** five thousand (5,000) tons.

If the total force working area that propelled ***M-Jedia*** is 20 square meters, the produce ***ExMF*** is 10^8 and the produced Force is 10^{20} Newton (line 2 in Graph 1), therefore the total force produced by the working area is 2x10^{21} Newton.

Using Newton's second law $F = ma$

Therefore the acceleration at which Jedia can leave the vicinity of the planet Earth towards Mars is 4x 10^{11} m.s^{-2}.

If the time t = 100 seconds, therefore from the above acceleration the velocity = 4x10^4 km.s^{-1}.

If produced ***ExMF*** =10, therefore the total force= 2x10^{34}, the velocity becomes 4x10^{23} km.s^{-1}.

This can give some idea about space journey and overcoming the gravity issue.

But what about the barrier formed by Einstein?

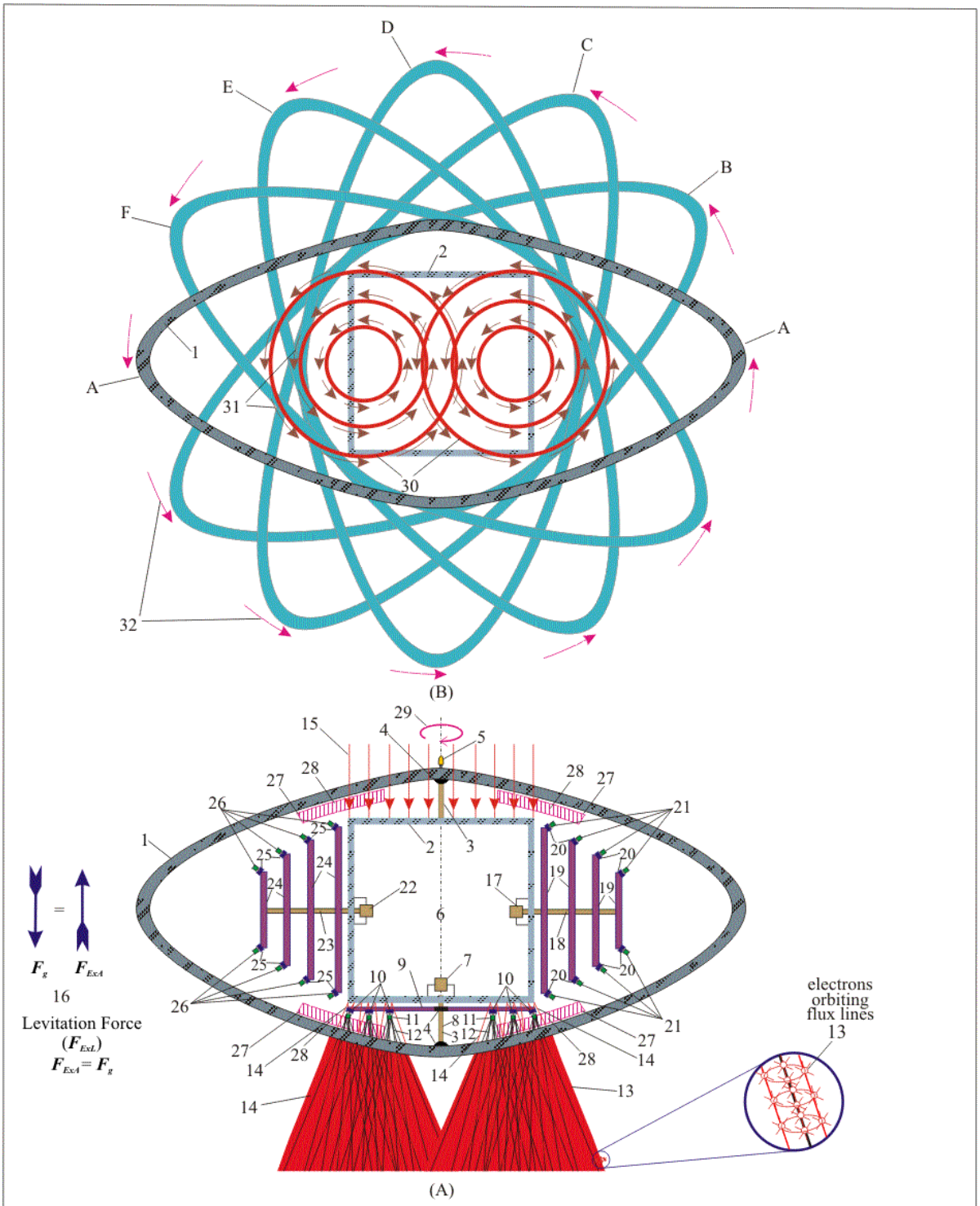

Fig.9. The spinning mechanism of Ski-Kush (***S-Kush***). In (A) leakage field from ***ExMF*** diverted by the ferromagnetic material 1. In (B), circles of rotating ***ExMF*** are shown by arrows, leakages fields 15 interacted with solenoid's magnetic fields 28 resulted in motor action, thus spinning the external diamagnetic body 1 along the vertical axis 3 in (A), direction of rotation is shown by arrows 29 in (B). As the external body 1 rotates from states A to B, C, D, E, F back to A in continual spinning motion, the internal body 2 with its occupants and control instruments are kept stable like gyroscope.

According to Einstein, the relativistic mass resulted from the energy of fast moving body is increasing with rate related to its approach to the speed of light.

But our ***M-Jedia*** has an internal body with the occupants and the instruments (2 in Fig.7) that is isolated from the external environment by a vacuum (gas or liquid) and the escaped ***ExMF*** around 1% of produced ***ExMF*** (as in the example above) it could reach a value of 10^7 T, therefore the internal body is not in motion relatively to the external body of the bismuth (1 in Fig.7), but the bismuth itself is engulf by both the ***ExMF*** at the back/sides, and internal escaped ***ExMF*** at the front, therefore the system in motion is the produced ***ExMF***.
That, the escape ***ExMF*** at front pushes any object from the path of ***M-Jedia***, while at that enormous speed it can be deflected from any heavy body such as Planets and Stars in a way similar to comets while rotating around the Sun.

10:0 ExMF-PS OPERATIONAL CHARACTERISTICS

The following are some of the characteristics thought to relate to the operation of ***ExMF-PS*** of both ***M-Jedia*** and ***S-Kush***:

1- The near to extreme ultra violet bright light emitting from portholes 5 in Fig.7, and by radiator 5 in Fig.8, is to ionize the surrounding air. It emits bright light with intensity similar to burning magnesium. In Fig.7 the number of portholes involved relates to the required amount of electrons.

2- If the ***S-Kush*** in Fig.9, is hanging several meters above the ground by ***ExMF*** $\boldsymbol{F_{ExL}}$, while the forward ***RLMF*** motors 17 and 20 are operating, at the same time the upper ionizer radiation is operating, an enormous amount of electrons will rush towards the ***RLMF*** and interact with it, thus causing a thunder-like sound. The ***ExMF*** $\boldsymbol{F_{ExD}}$ will simultaneously move the object forward at enormous speed.

3- Electrons gyrating around the ***RLMF*** while producing ***ExMF*** during ascending or forward driving propulsion will either radiate synchrotron radiation (like an aurora) or look like smoke haze at daytime. If electric current to the solenoids producing the ***RLMF*** are stopped, so that gyrating electrons are ejected from the system they will look like emitted smoke.

4- Energization of charged particles to higher energies, producing the desired ***ExMF,*** could be maintained at a specific magnitude by the ***RLMF*** while it radiates part of the energy in the form of synchrotron radiation for intermittent periods determined by Eq.{13}. It should be further noted that no sound would be heard from the object, while hanging by the ***ExMF*** $\boldsymbol{F_{ExL}}$ forces, given by Eq.{25}.

5- Energies acquired by charged particles are dissipated through two ways:
   a. Production of ***ExMF*** [4].
   b. Electromagnetic radiation [14] that is part of the above.

6- The mechanism through which threads of charged particles rotate while bound to the intense ***ExMF*** could cause various interesting side effects worthy of further research, depending on the type of the materials effected (ferromagnetic, diamagnetic or paramagnetic), especially in different combinations of propulsion systems used. All materials can give different phenomena. Some of these phenomena are:
   a. As diamagnetic material, water is agitated by magnetic field [29] (several living tissue materials like frogs and strawberries for instance were levitated and filmed [23]). Since water and chlorophyll constitutes high percentages in the constituency of trees, it follows that within the presence of intense rotating ***ExMF,*** when the ***FOs*** are propelled by the ascending or forward drive force, tree branches would be prone to twist and even break.
   b. Like water, wheat and maize are diamagnetic materials. During ascending or levitation stage, the rotating ***ExMF*** occurring near these crops would move them in the direction determined by the craft's ***RLMF.*** Such as is illustrated

in Figs.7-C where the cross section of the rotating ***ExMF*** across the line B-B shows three stripes 43 formed by the stability ***ExMF*** 31, while the circles 44 and 45 are formed by the ascending rotating ***ExMF*** 13 and the smaller circles 46 are also formed by ***ExMF*** 13 while motor 6 A is stopped. Therefore, these factors suggest how crops can become twisted and break under the pressure of this field's force. The complexities of resulting shapes are determined by several factors, such as the combinations of various ascending, stability and driving forces used.

c. As water is agitated by low magnetic field [29] then with intense ***ExMF,*** as shown in Graph.1, water could look as if it's boiling.

7- When the system is under continuous rotation, and higher energization is obtained producing maximum ***ExMF***, then one of the following particle fusion mechanisms [4] would take place as follows:

a- As ***ExMF*** is produced by gyrating electrons at intense ***ExMF*** production electrons fusion occurs [4], and thread like spider's web [30], are ejected from the flying object. The length of which is determined by the total length *l* along which electrons gyrate as given by Eq.{6}.

b- As gyrating protons produce ***ExMF***, at specific intense ***ExMF*** protons fusion occurs [4], and enormous energy and ***ExMF*** are released.

8- If solenoid current in Eq.{16} is increased. The emerged ***RLMF*** intensity is changed. Thus the bulk of gyrating charged particles moves away from the bismuth surface.

9- When intense ***ExMF*** is produced, the captured charged particles will start to radiate intense synchrotron radiation similar to aurora [14]. Since its wavelength is determined by gyrating radius, therefore radiated colors produced will be relative to the produced ***ExMF*** intensity, in accordance to the magnitude of the ***ExMF*** $\boldsymbol{F_{ExA}}$ or $\boldsymbol{F_{ExD}}$ and the velocity of the flying object.

10- From the above, since operational force given by Eq.{26} is proportional to produced ***ExMF***, therefore, the radiated color represents the magnitude of driving force.

11- As shown in Figs.7, 8 & 9, both ***M-Jedia*** and ***S-Kush*** consist of two shells, the external diamagnetic material which interacts with the propellant, and the internal shell consisting of a ferromagnetic material acting as magnetic shield or keeper, so as to reduce the effects of excess ***ExMF*** upon the occupants and instruments, Fig.7. C.

12- For ***S-Kush*** shown in Figs.8 & 9 the two shells 1 and 2 are linked with beams and axles 3 that could be locked. If the lock is released and since the disk edges are similar therefore, any excessive ***ExMF*** could interact with magnetic fields 28 produced by solenoids 27 in Fig.9 leading to the spinning of the external diamagnetic body. In Fig.9-B, the internal body 2 is kept fixed while the external body 1 rotates 32 from position A to F, shown by red arrows, while rotation of ***ExMF*** 30 is shown by brown arrows 31.

13- The ability of rotating and intense ***ExMF*** to produce electricity is shown in Fig.4, it gives a hint to the amount of forward or reverse current that could be produced on any national grid (near electricity pylons), if ***M-Jedia*** of Fig.7, or ***S-Kush*** of Fig.8, flow with ***ExMF*** over such grid cables or pylons.

14- Also related to above, the rotating ***ExMF*** can induce back current (back-emf) in the wiring or coil of an electric car neutralizing the battery current, thus can cause the stalling of the petrol engine cars.

15- While using external electrons to produce ***ExMF***, an enormous amount of heat is generated, particularly at the surface of the diamagnetic material, duly an odor (or metallic smell) may result, from above chemical reaction.

16- Saucer shaped objects (like ***S-Kush*** in Figs. 8 & 9) when falling from high altitude (as if powerless), fall down in a leaf type motion due to their aerodynamic structures. But if this action is interrupted, at any altitude, with the switching in of the ascending (or driving) motors and the ionizers, then an ***ExMF*** would be instantly produced (as shown in Graph.1) and with it consequently an instant ***ExMF-*** $\boldsymbol{F_{ExA}}$ or $\boldsymbol{F_{ExD}}$ force, so that the object could be made to stop motionless very quickly, or the object could even move vertically upward, or forward, almost as instantly. Indeed, this force allows the object to perform great acceleration and different maneuverability.

17- Defects in radio receiver power supply (sometimes caused by-pass capacitors) cause the well-known hum sound, and this is the audible 50/60 $Hz.s^{-1}$ due to the ± rotational cycle of electric current. And likewise, because ***M-Jedia*** and ***S-Kush*** (shown in Figs. 7 & 8) use internal motors to produce their ***RLMF***, and because these motors operate around ±3000 $r.p.m^{-1}$ (or ±50 Hz), therefore if the motor is operating a hum will be heard when the object operates its motor while flying in the vicinity.

18- Various whistling sounds heard and detected at the aurora zone and recorded at Saturn boundaries by Cassini, could either be caused by low frequency electromagnetic wave or lengthy gyrating electrons touching each other. Such sounds will also be heard while ***M-Jedia*** or ***S-Kush*** is moving in the vicinity.

19- In addition of propelling flying objects, such as discs, ovals and cylinders, of various shapes and sizes, the ***ExMF-PS*** can be used to propel vehicles, drive rail trains, propel ships and propel modified airplanes.

20- The Searl Effect Generator (SEG) that so often disappeared while on early tests [11] represents an uncontrollable chain of ***ExMF*** build up that propels the SEG into upper atmosphere. While a modified version [13] based on the ***ExMF***-Propulsion can produce any amount of ***e.m.f.*** that could be used as main source of energy and in the flying objects.

21- As seen the characteristics explained above, explains in the same time most of the phenomena reported by witness of Unidentified Flying Objects (UFOs) [31, 32, 33, 34].

22- The two layers of M-Jedia can absorb all gamma-rays, high-energy protons and cosmic rays from solar flares or from far Stars and Galaxies.

22- The link between ***ExMF-PS*** and the Heim's ***rapdrive*** [35] is that both of them utilized high magnetic field to cause relative shift in space within a limit time.

23- This work may help in answering many of space questions [36]

ACKNOWLEDGMENTS

Special gratitude to Mr. Paul E Potter, for kindly reviewing the manuscript and positive touches in the figures and criticisms reflected in this work. Brothers and sisters, Mustafa, Halima, Hukmala, Asha, Arfa, Ahmad, Esmaiel, Safya and her husband Abubakar Mohammad,. The Late Prof. B.O. Kola, and Dr John Buers Awuor, Dr Lino Gwaki, Dr P. Baki, Prof, Bernard O. Aduda, Prof. J. Otieno Malo and staff of Physics Department University of Nairobi. Dr Ali Khogali, Late Yousif Kuwa Makki, Dr. Garang Ring Lual, Mr. Kazimiro Rudolf Jocondo, Ahmad Alhag Adam, Sediq A. Musabal, and Qamrul Haider.

11:00 Glossaries

$\boldsymbol{B_{EI}}$: Intense produced ***ExMF***.
D: Distance between two magnetic lines of force.
$\boldsymbol{d_K}$: Three dimensions rotations ($\boldsymbol{d_X} = \boldsymbol{d_Y} + \boldsymbol{d_Z}$).
$\boldsymbol{E_C}$: Radiated synchrotron energy.
e.m.f: Electromotive force.
EMLF: the Elements of Magnetic Lines of Force.
ExMF: External Magnetic Field.
ExMF-PS: External Magnetic Field Propulsion System.
$\boldsymbol{F_{Ex}}$: ***ExMF*** force.
$\boldsymbol{F_{ExA}}$: ***ExMF*** ascending force.
$\boldsymbol{F_{ExB}}$: ***ExMF*** Brake force.
$\boldsymbol{F_{ExD}}$: ***ExMF*** Driving force.
$\boldsymbol{F_{ExL}}$: ***ExMF*** Levitation force.
$\boldsymbol{F_{ExO}}$: the ***ExMF*** operational force.
$\boldsymbol{F_{ExR}}$: ***ExMF*** Resulting Force.
$\boldsymbol{F_{ExS}}$: ***ExMF*** Stability force.
$\boldsymbol{F_g}$: local gravitational force.
FO: flying objects.
$\boldsymbol{F_T}$: Translational force.
$\boldsymbol{K_M}$: Minimum required energy (to sustain ***ExMF*** operating the system).
$\boldsymbol{K_{TS}}$: Energy of the charged particle.
MIH: The magnetic interaction hypothesis.
$\boldsymbol{N_C}$: Number of magnetic Lines of force in circumferential layers.
$\boldsymbol{N_{c1}}$: Relative percentage of magnetic lines of force in the 1st group (outer).
$\boldsymbol{N_{c1}}$: Relative percentage of magnetic lines of force in the 2nd group (central).
$\boldsymbol{N_{c3}}$: Relative percentage of magnetic lines of force in the 3rd group (inner).
n_m: Number of charged particles along one meter length.
n_{m1}: 80% of charged particles captured along one meter of line of force by the 1st groups.
n_{m2}: 15% of charged particles captured along one meter of line of force by the 2nd groups.
n_{m3}: 5% of charged particles captured along one meter of line of force by the 3rd groups.
$\boldsymbol{N_S}$: Number of magnetic lines of force along cross-sectional side of the bundle.
RLMF: rotating low magnetic fields.
SEG: The Searl Effect Generator.
SMF: The Spinning Magnetic Force.
$\boldsymbol{T_S}$: Sustainability period is in seconds.
UE: *Universal Energies*.
γ_{ps} : Relative magnitudes of the primary and secondary ***ExMF***
χ_a : Susceptibility of material adjacent to the diamagnetic surface (i.e. the air).
χ_D : Susceptibility of the diamagnetic material.

12:0 REFERENCES

1- Drake, Frank and Dava Sobel 1993 Is Any One Out There? Pocket Book, London, pp 101.
2- Yousif, Mahmoud E. “The Magnetic Interaction”, Modified version:
http://www.exmfpropulsions.com/New_Physics/MIH.pdf
Fist published, 09-Oct-2003, at:
http://d1002391.mydomainwebhost.com/JOT/Links/Papers/MY.pdf

3- Yousif, Mahmoud E. The Spinning Magnetic Field, at:
http://www.exmfpropulsions.com/New_Physics/SMFc.pdf
http://d1002391.mydomainwebhost.com/JOT/Links/Papers/MY-S.pdf 09-Oct-2003c.
4- Yousif, Mahmoud E. THE UNIVERSAL ENERGIES, at:
http://www.exmfpropulsions.com/New_Physics/New_Energy/UE.pdf
http://d1002391.mydomainwebhost.com/JOT/Links/Papers/Yousif.pdf 18-Jan-2004.
5- Yousif, Mahmoud E. ELEMETS OF THE MAGNETIC LINES OF FORCE, at:
http://www.exmfpropulsions.com/New_Physics/EMLF.pdf
http://d1002391.mydomainwebhost.com/JOT/Links/Papers/MY-E.pdf 09-Oct-2003b.
6- Kapitza, P. 1967 Collected Papers of P. Kapitza (The Production of and Experiments in Strong Magnetic Field), Edited by D. Ter Hear, Pergamon Press, Oxford.
7- Ashpole, Edward 1995 THE UFO PHENOMENA, Headline Publishing, London.
8- Millis Marc G. Responsible Official http://www.grc.nasa.gov/WWW/bpp/
9- Marc G. Millis, **Breakthrough Propulsion Physics at :**
http://www.grc.nasa.gov/WWW/bpp/index.html
10- Sligar, David What is Magnetic Field? http://www.geocities.com/dsligar.geo/mfield.html
11- Searl, J.R.R., Web site at: www.searleffect.com , 2002.
12- V. V. Roschin, S. M. Godin, the Experimental Research of the Magnetic-Gravity Effects. Full Size SEG tests, *http:// www.searleffect.com/free/russianseg/russianseg.htm*).
13- Yousif, Mahmoud E., Modified Roschin-Godin-Searl Generator ***(M-RG-Searl-G)***,
http://www.exmfpropulsions.com/New_Physics/New_Energy/M-RG-Searl-G.html
14- Yousif, Mahmoud E. ELECTROMAGNETIC RADIATION, Unpublished work.
15- Nightingale, E. 1958 Magnetism and Electricity, G. Bell and Sons Ltd, London, pp 10-11,48.
16- Trinklein, Frederick E.1990 Modern Physics, Holt, Rinehart and Winston Inc., New York.
17- Jayawant B. V., 1981 Electromagnetic Levitation and Suspension Techniques, Edward Arnold (Publisher) Ltd., London.
18- Kitaigorodsky A. 1968 Introduction To Physics, Translated from Russian by O. Smith, Mir Publisher, Moscow.
19- Anderson, J.C. 1968 Magnetism and Magnetic Materials, Spottiswood Ballanantyne and Co. Ltd, London.
20- Ramsey, William L., Clifford R. Phillips, Raymond A. Barckley and Frank M. Watenpaugh 1969 Modern Earth Science, Holt, Rinchart and Winston Inc., New York.
21- Simon, Martin and Andre Geim Department of Physics and Astronomy, UCLA , High Field Magnet Laboratory, University of Nijmegen, The Netherlands
http://www.physics.ucla.edu/marty/diamag/
22- Faculty of Science of the University of Nijmegen HFML, http://www.hfml.kun.nl/froglev.html
23- Faculty of Science of the University of Nijmegen HFML, http://www.hfml.kun.nl/levitation-movies.html
24- Railway Technical Research Institute, http://www.rtri.or.jp/rd/maglev/html/english/maglev_principle_E.html
25- Advanced Space Transportation Technology Summary, Magnetic Levitation
http://www1.msfc.nasa.gov/news/astptechbriefs/Maglev.pdf
26- The Subcommittee on Railroads Hearing on Magnetic Levitation Transportation,
http://www.house.gov/transportation/rail/06-21-01/06-21-1memo.html#BACKGROUND
27- Eric Weisstein's World of Science http://scienceworld.wolfram.com/physics/Diamagnetism.html
28- Emsley, John 1991, The Elements, Clarendon Press, Oxford.

29- Faculty of Science of the University of Nijmegen HFML, http://www.hfml.kun.nl/pices/Movies/water3.mpg
30- Spencer, John1991 The UFO Encyclopedia, Headline, London.
31- Jacques and Janine Vallee 1966 The UFO Enigma, Ballantine Books, New York.
32- Watts, Alan 1994 UFO QUEST (In Search of the Mystery Machines), Blandford, London.
33- Vallee, Jacques 1965 UFO's IN SPACE: Anatomy of a Phenomenon, Ballantine Books, New York.
34- Vallee, Jacques 1990 CONFRONTATION, Ballantine Books, New York.
35- Dröscher and Jochem Häuser on their paper "Guidelines for a space propulsion device based on Heim's quantum theory" http://www.newscientistspace.com/article/mg18925331.2001
36- THE REPORT OF THE NATIONAL COMMISSION ON SPACE, 986 Pioneers in Space Frontier, Bantam Book, N.Y.

Published by:

http://www.exmfpropulsions.com/