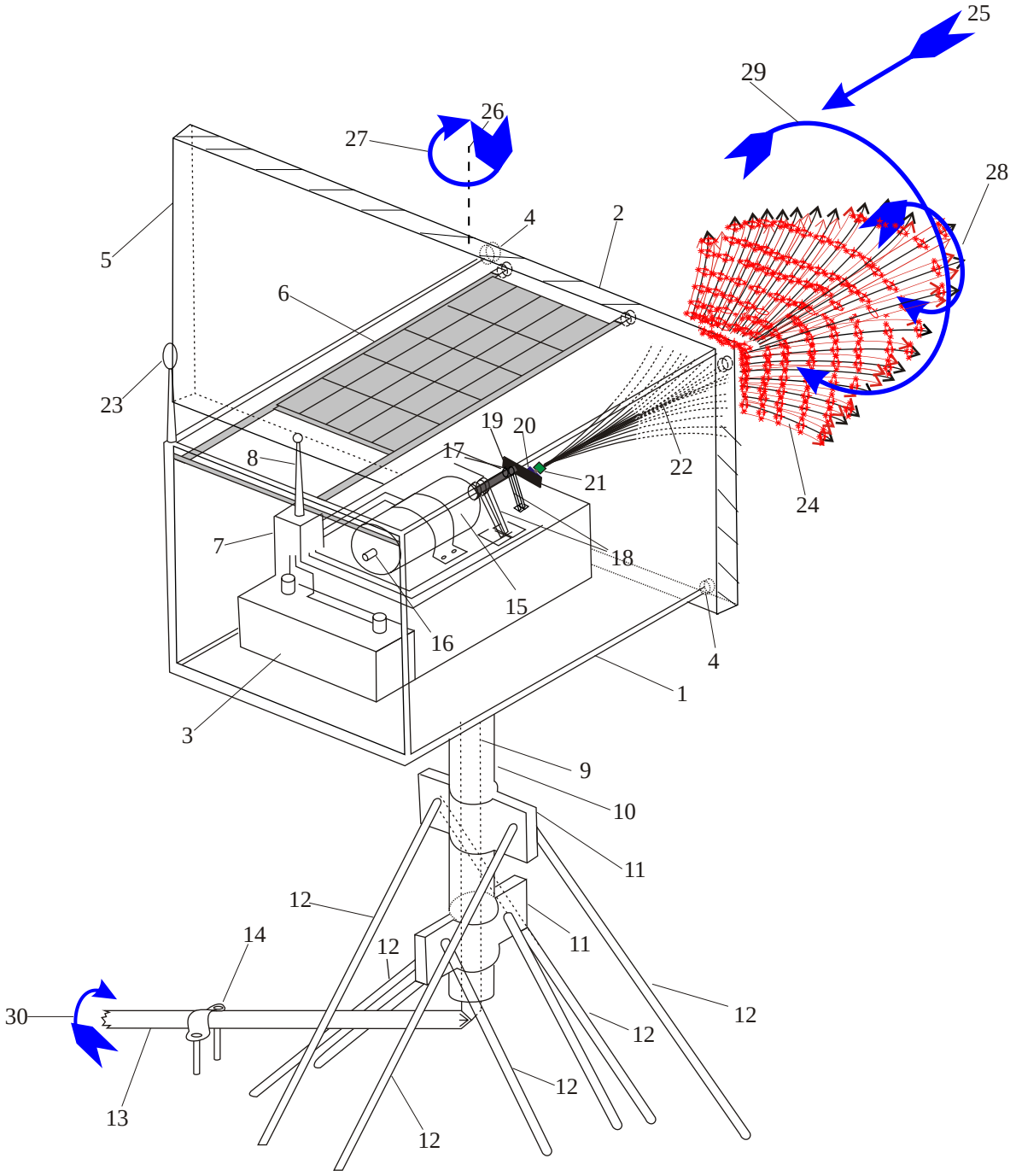

Fig.6 External Magnetic Field Rotary Propel machine (***ExMF-RPM***), remotely controlled, the produced ***ExMF*** interacted with the bismuth, thus rotating upper assemble, hence the shaft.

http://exmfpropulsions.com/